Spherical roller bearing 22214 RZW33 KOYO

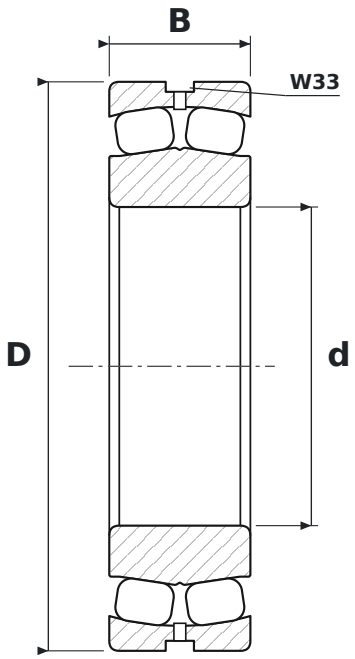

DIMENSIONS

d	bore diameter	**70 mm**
D	outside diameter	**125 mm**
B	width	**31 mm**

WHAT 22214 RZW33 MEANS

RZ	baryłki symetryczne, koszyk tłoczony
W33	lubrication groove and holes in the outer ring

SPECIFICATIONS

Manufacturer	**KOYO**
Manufacturer designation	**22214 RZW33**
Rolling elements	**double-row spherical roller bearing**