Spherical roller bearing 22220 EAD1 NTN

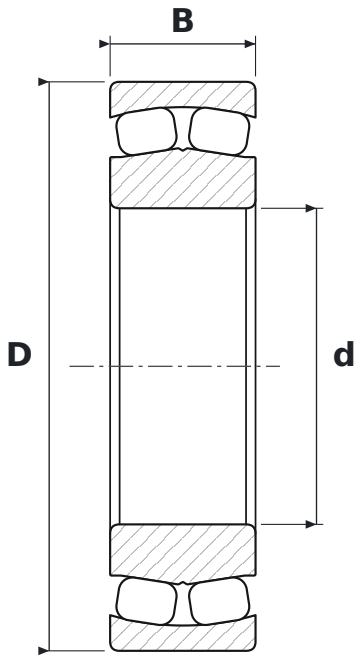

DIMENSIONS

d	bore diameter	**100 mm**
D	outside diameter	**180 mm**
B	width	**46 mm**

WHAT 22220 EAD1 MEANS

EA	pressed steel cage, high-capacity design (NSK)
D1	rowek i otwory smarowe w pierścieniu zewnętrznym

SPECIFICATIONS

Manufacturer	**NTN**
Manufacturer designation	**22220 EAD1**
Rolling elements	**double-row spherical roller bearing**