Spherical roller bearing 22220 EAW33ZZ SNR

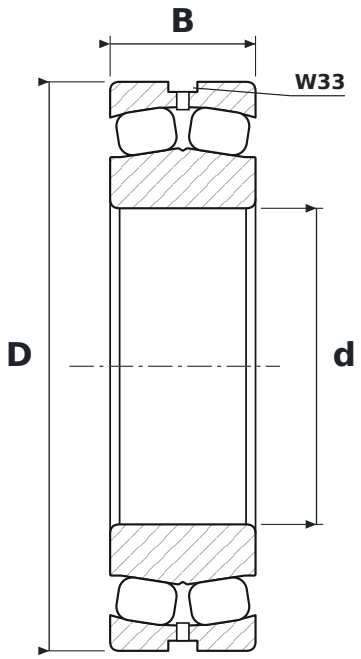

DIMENSIONS

d	bore diameter	**100 mm**
D	outside diameter	**180 mm**
B	width	**46 mm**

WHAT 22220 EAW33ZZ MEANS

EA	pressed steel cage, high-capacity design (NSK)
W33	lubrication groove and holes in the outer ring
ZZ	blaszki ochronne, dwustronne

SPECIFICATIONS

Manufacturer	**SNR**
Manufacturer designation	**22220 EAW33ZZ**
Rolling elements	**double-row spherical roller bearing**