# Spherical roller bearing 22220 EAKW33C3 NTN

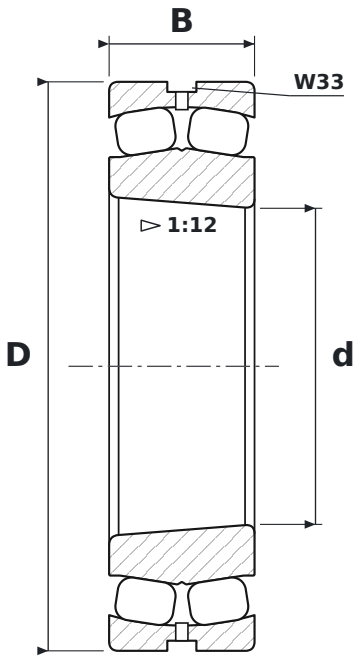


## DIMENSIONS

| | | |
|---|---|---|
| **d** | bore diameter | **100 mm** |
| **D** | outside diameter | **180 mm** |
| **B** | width | **46 mm** |

## WHAT 22220 EAKW33C3 MEANS

| | |
|---|---|
| **EA** | pressed steel cage, high-capacity design (NSK) |
| **K** | tapered bore, taper 1:12 |
| **W33** | lubrication groove and holes in the outer ring |
| **C3** | radial clearance greater than normal |

## SPECIFICATIONS

| | |
|---|---|
| Manufacturer | **NTN** |
| Manufacturer designation | **22220 EAKW33C3** |
| Rolling elements | **double-row spherical roller bearing** |
| Mass | **4.81 kg** |