Spherical roller bearing 22234 EMW33 NTN

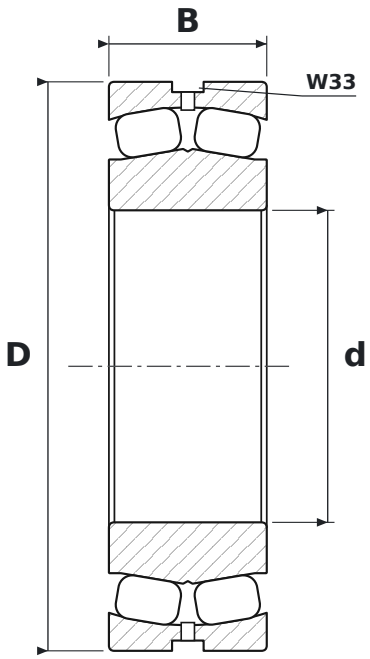

DIMENSIONS

d	bore diameter	**170 mm**
D	outside diameter	**310 mm**
B	width	**86 mm**

WHAT 22234 EMW33 MEANS

EM	machined brass cage (NSK)
W33	lubrication groove and holes in the outer ring

SPECIFICATIONS

Manufacturer	**NTN**
Manufacturer designation	**22234 EMW33**
Rolling elements	**double-row spherical roller bearing**