Spherical roller bearing 22234-E1-K FAG

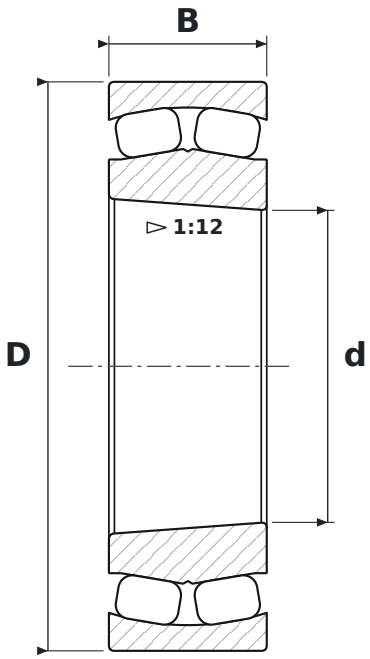

DIMENSIONS

d	bore diameter	**170 mm**
D	outside diameter	**310 mm**
B	width	**86 mm**

WHAT 22234-E1-K MEANS

E1	reinforced design E1 (FAG)
K	tapered bore, taper 1:12

SPECIFICATIONS

Manufacturer	**FAG**
Manufacturer designation	**22234-E1-K**
Rolling elements	**double-row spherical roller bearing**
Mass	**27.1 kg**