Spherical roller bearing 22234 RHAW33C3 KOYO

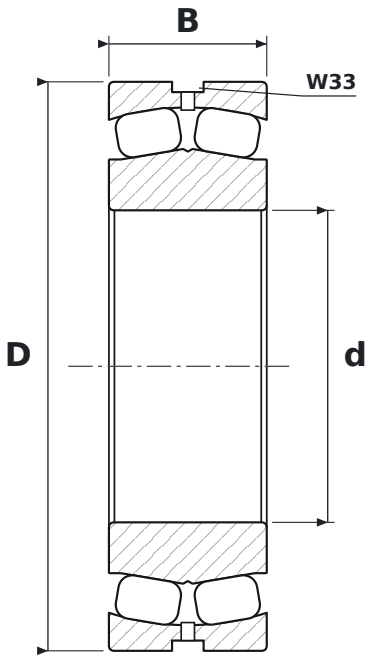

DIMENSIONS

d	bore diameter	**170 mm**
D	outside diameter	**310 mm**
B	width	**86 mm**

WHAT 22234 RHAW33C3 MEANS

RHA	baryłki symetryczne, koszyk masywny jednoczęściowy
W33	lubrication groove and holes in the outer ring
C3	radial clearance greater than normal

SPECIFICATIONS

Manufacturer	**KOYO**
Manufacturer designation	**22234 RHAW33C3**
Rolling elements	**double-row spherical roller bearing**