Spherical roller bearing 22244 EJW33C3 TIMKEN

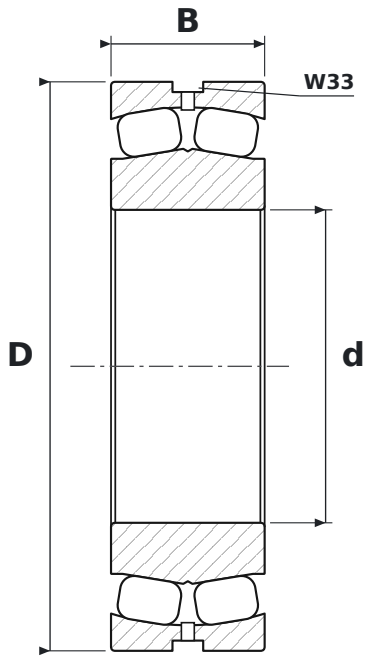

DIMENSIONS

d	bore diameter	**220 mm**
D	outside diameter	**400 mm**
B	width	**108 mm**

WHAT 22244 EJW33C3 MEANS

EJ	pressed steel cage (Timken)
W33	lubrication groove and holes in the outer ring
C3	radial clearance greater than normal

SPECIFICATIONS

Manufacturer	**TIMKEN**
Manufacturer designation	**22244 EJW33C3**
Rolling elements	**double-row spherical roller bearing**