Spherical roller bearing 22310 EAW33C3 NTN

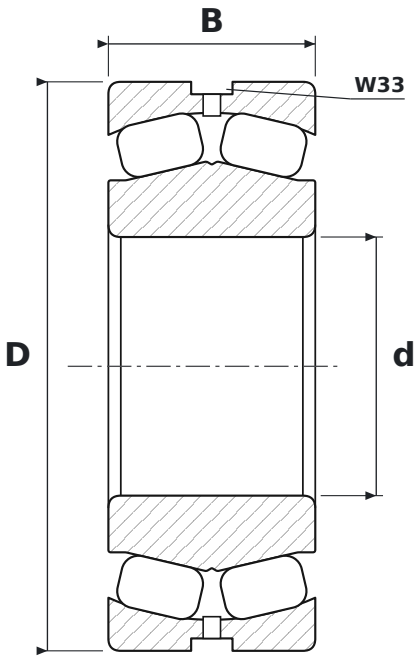

DIMENSIONS

d	bore diameter	**50 mm**
D	outside diameter	**110 mm**
B	width	**40 mm**

WHAT 22310 EAW33C3 MEANS

EA	pressed steel cage, high-capacity design (NSK)
W33	lubrication groove and holes in the outer ring
C3	radial clearance greater than normal

SPECIFICATIONS

Manufacturer	**NTN**
Manufacturer designation	**22310 EAW33C3**
Rolling elements	**double-row spherical roller bearing**
Mass	**1.834 kg**