Spherical roller bearing 22310 KEJW33 TIMKEN

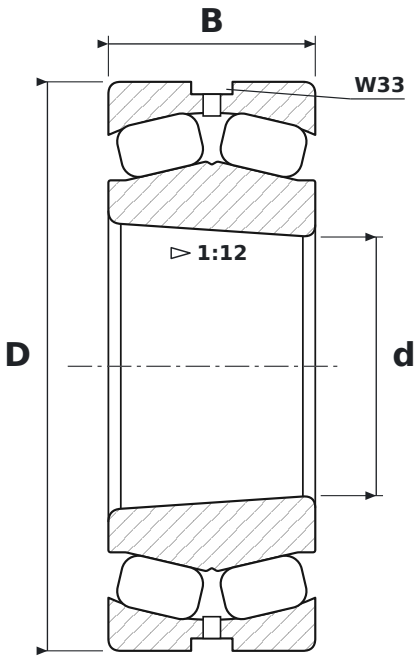

DIMENSIONS

d	bore diameter	**50 mm**
D	outside diameter	**110 mm**
B	width	**40 mm**

WHAT 22310 KEJW33 MEANS

K	tapered bore, taper 1:12
EJ	pressed steel cage (Timken)
W33	lubrication groove and holes in the outer ring

SPECIFICATIONS

Manufacturer	**TIMKEN**
Manufacturer designation	**22310 KEJW33**
Rolling elements	**double-row spherical roller bearing**