Spherical roller bearing 23032 EAW33C3 NTN

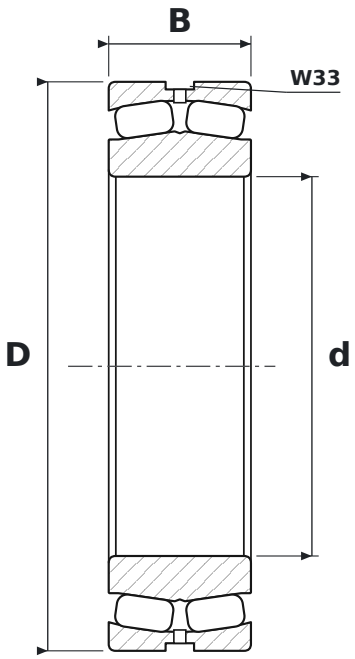

DIMENSIONS

d	bore diameter	**160 mm**
D	outside diameter	**240 mm**
B	width	**60 mm**

WHAT 23032 EAW33C3 MEANS

EA	pressed steel cage, high-capacity design (NSK)
W33	lubrication groove and holes in the outer ring
C3	radial clearance greater than normal

SPECIFICATIONS

Manufacturer	**NTN**
Manufacturer designation	**23032 EAW33C3**
Rolling elements	**double-row spherical roller bearing**
Mass	**9.385 kg**