CASTOMER

DATASHEET

Spherical roller bearing 23032 EMW33 TIMKEN

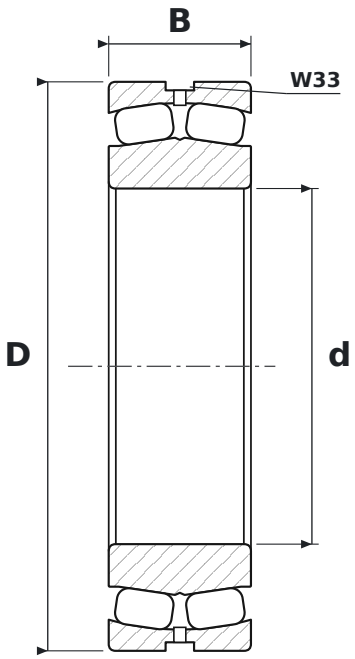

DIMENSIONS

d	bore diameter	**150 mm**
D	outside diameter	**240 mm**
B	width	**60 mm**

WHAT 23032 EMW33 MEANS

EM	machined brass cage (NSK)
W33	lubrication groove and holes in the outer ring

SPECIFICATIONS

Manufacturer	**TIMKEN**
Manufacturer designation	**23032 EMW33**
Rolling elements	**double-row spherical roller bearing**