Spherical roller bearing 23036 EAKW33C3 NTN

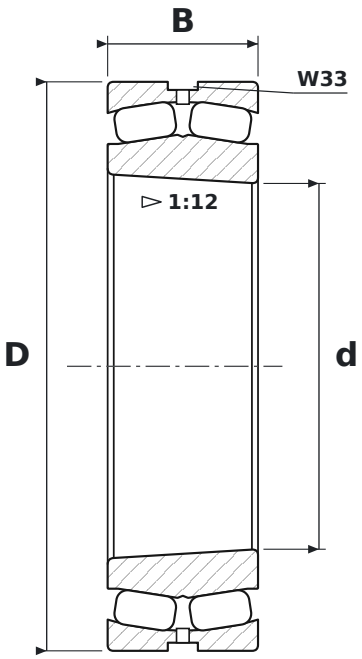

DIMENSIONS

d	bore diameter	**180 mm**
D	outside diameter	**280 mm**
B	width	**74 mm**

WHAT 23036 EAKW33C3 MEANS

EA	pressed steel cage, high-capacity design (NSK)
K	tapered bore, taper 1:12
W33	lubrication groove and holes in the outer ring
C3	radial clearance greater than normal

SPECIFICATIONS

Manufacturer	**NTN**
Manufacturer designation	**23036 EAKW33C3**
Rolling elements	**double-row spherical roller bearing**