Spherical roller bearing 23068 ECAK/W33 STEYR

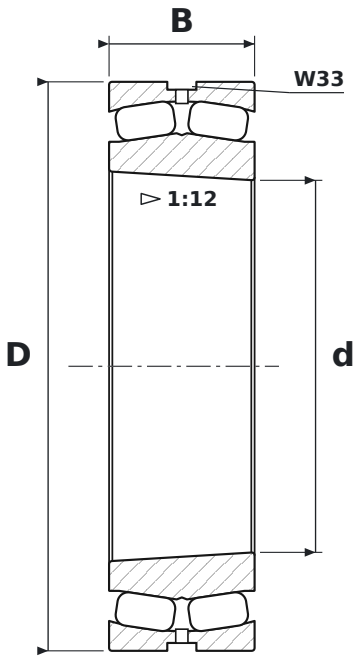

DIMENSIONS

d	bore diameter	**340 mm**
D	outside diameter	**520 mm**
B	width	**133 mm**

WHAT 23068 ECAK/W33 MEANS

E	reinforced design, higher load rating
CA	machined brass cage, roller centred (SKF)
K	tapered bore, taper 1:12
W33	lubrication groove and holes in the outer ring

SPECIFICATIONS

Manufacturer	**STEYR**
Manufacturer designation	**23068 ECAK/W33**
Rolling elements	**double-row spherical roller bearing**