Spherical roller bearing 23120 EAW33C3 NTN

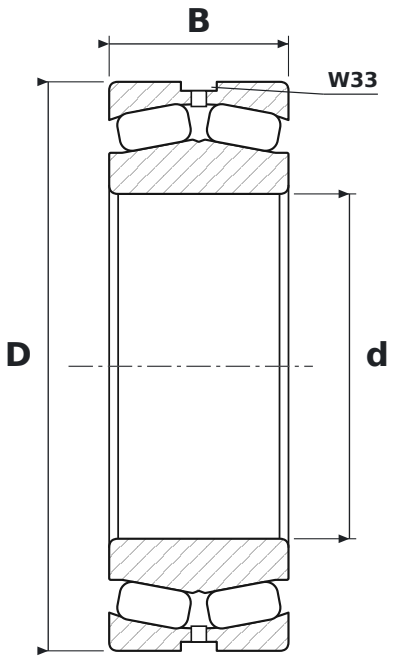

DIMENSIONS

d	bore diameter	**100 mm**
D	outside diameter	**165 mm**
B	width	**52 mm**

WHAT 23120 EAW33C3 MEANS

EA	pressed steel cage, high-capacity design (NSK)
W33	lubrication groove and holes in the outer ring
C3	radial clearance greater than normal

SPECIFICATIONS

Manufacturer	**NTN**
Manufacturer designation	**23120 EAW33C3**
Rolling elements	**double-row spherical roller bearing**
Mass	**4.41 kg**