# Spherical roller bearing 23120 KEJW33 TIMKEN

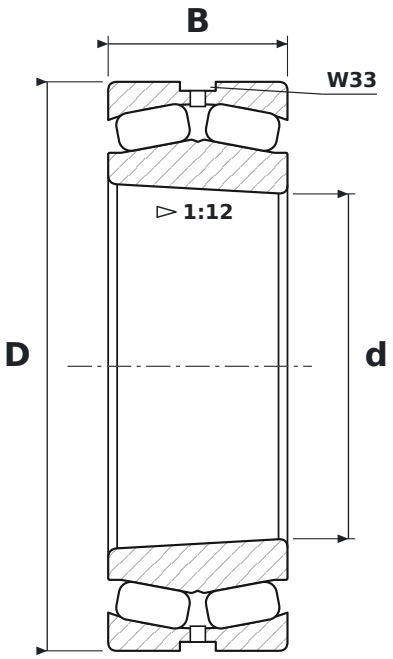


## DIMENSIONS

| | | |
|---|---|---|
| **d** | bore diameter | **100 mm** |
| **D** | outside diameter | **165 mm** |
| **B** | width | **52 mm** |

## WHAT 23120 KEJW33 MEANS

| | |
|---|---|
| **K** | tapered bore, taper 1:12 |
| **EJ** | pressed steel cage (Timken) |
| **W33** | lubrication groove and holes in the outer ring |

## SPECIFICATIONS

| | |
|---|---|
| Manufacturer | **TIMKEN** |
| Manufacturer designation | **23120 KEJW33** |
| Rolling elements | **double-row spherical roller bearing** |