Spherical roller bearing 23126 EJW33C3 TIMKEN

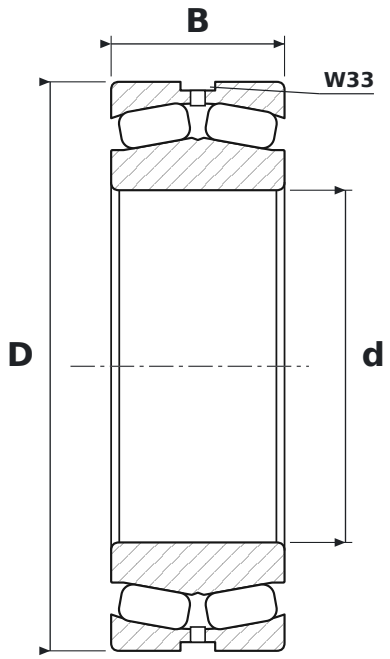

DIMENSIONS

d	bore diameter	**130 mm**
D	outside diameter	**210 mm**
B	width	**64 mm**

WHAT 23126 EJW33C3 MEANS

EJ	pressed steel cage (Timken)
W33	lubrication groove and holes in the outer ring
C3	radial clearance greater than normal

SPECIFICATIONS

Manufacturer	**TIMKEN**
Manufacturer designation	**23126 EJW33C3**
Rolling elements	**double-row spherical roller bearing**