# Spherical roller bearing 23126-MB-C3-W33 NKE

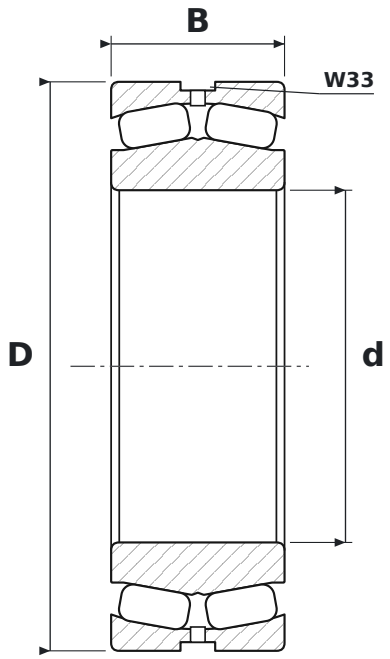


## DIMENSIONS

| | | |
|---|---|---|
| **d** | bore diameter | **130 mm** |
| **D** | outside diameter | **210 mm** |
| **B** | width | **64 mm** |

## WHAT 23126-MB-C3-W33 MEANS

| | |
|---|---|
| **MB** | machined brass cage, inner ring centred |
| **C3** | radial clearance greater than normal |
| **W33** | lubrication groove and holes in the outer ring |

## SPECIFICATIONS

| | |
|---|---|
| Manufacturer | **NKE** |
| Manufacturer designation | **23126-MB-C3-W33** |
| Rolling elements | **double-row spherical roller bearing** |