# Spherical roller bearing 23132 EAW33 NTN

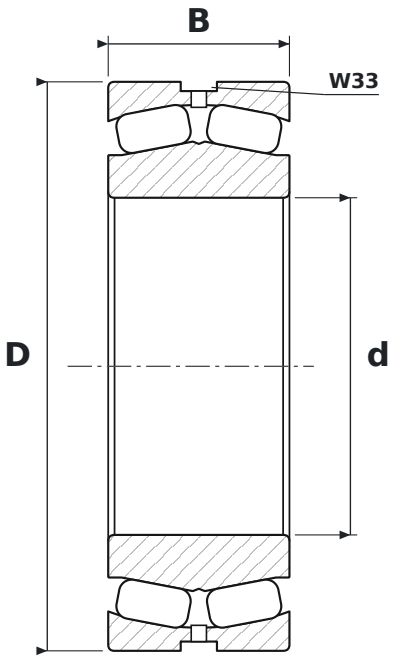


## DIMENSIONS

| | | |
|---|---|---|
| **d** | bore diameter | **160 mm** |
| **D** | outside diameter | **270 mm** |
| **B** | width | **86 mm** |

## WHAT 23132 EAW33 MEANS

| | |
|---|---|
| **EA** | pressed steel cage, high-capacity design (NSK) |
| **W33** | lubrication groove and holes in the outer ring |

## SPECIFICATIONS

| | |
|---|---|
| Manufacturer | **NTN** |
| Manufacturer designation | **23132 EAW33** |
| Rolling elements | **double-row spherical roller bearing** |
| Mass | **20.83 kg** |