Spherical roller bearing 23136-CE-C3-W33 NKE

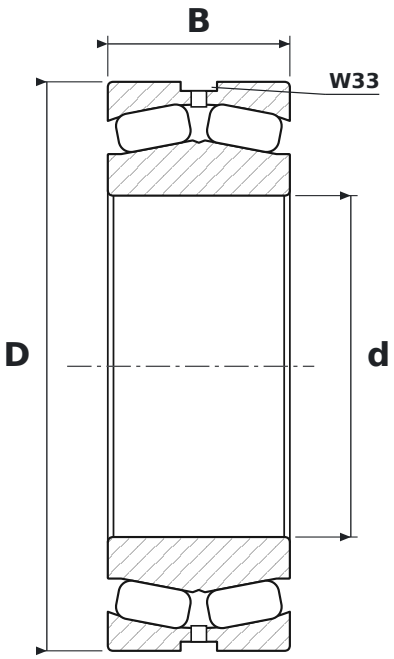

DIMENSIONS

d	bore diameter	**180 mm**
D	outside diameter	**300 mm**
B	width	**96 mm**

WHAT 23136-CE-C3-W33 MEANS

CE	wykonanie z symetrycznymi baryłkami, koszyk stalowy tłoczony
C3	radial clearance greater than normal
W33	lubrication groove and holes in the outer ring

SPECIFICATIONS

Manufacturer	**NKE**
Manufacturer designation	**23136-CE-C3-W33**
Rolling elements	**double-row spherical roller bearing**