Spherical roller bearing 23136 EJW33 TIMKEN

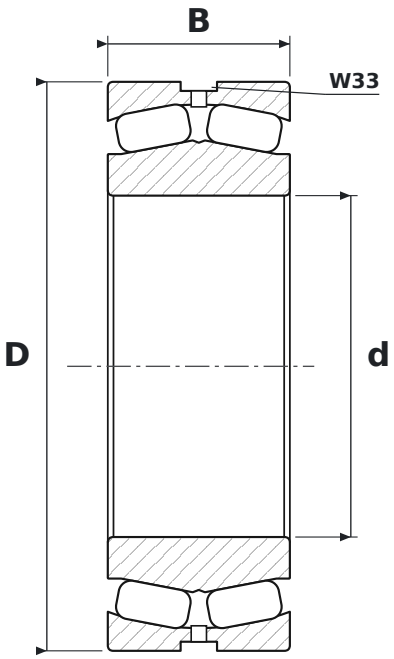

DIMENSIONS

d	bore diameter	**180 mm**
D	outside diameter	**300 mm**
B	width	**96 mm**

WHAT 23136 EJW33 MEANS

EJ	pressed steel cage (Timken)
W33	lubrication groove and holes in the outer ring

SPECIFICATIONS

Manufacturer	**TIMKEN**
Manufacturer designation	**23136 EJW33**
Rolling elements	**double-row spherical roller bearing**