Spherical roller bearing 23218 RZKW33C3 KOYO

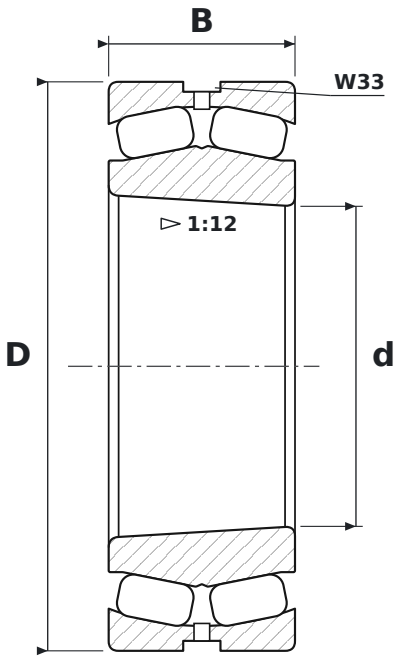

DIMENSIONS

d	bore diameter	**90 mm**
D	outside diameter	**160 mm**
B	width	**52.4 mm**

WHAT 23218 RZKW33C3 MEANS

RZ	baryłki symetryczne, koszyk tłoczony
K	tapered bore, taper 1:12
W33	lubrication groove and holes in the outer ring
C3	radial clearance greater than normal

SPECIFICATIONS

Manufacturer	**KOYO**
Manufacturer designation	**23218 RZKW33C3**
Rolling elements	**double-row spherical roller bearing**