Spherical roller bearing 23232 RKW33C3 KOYO

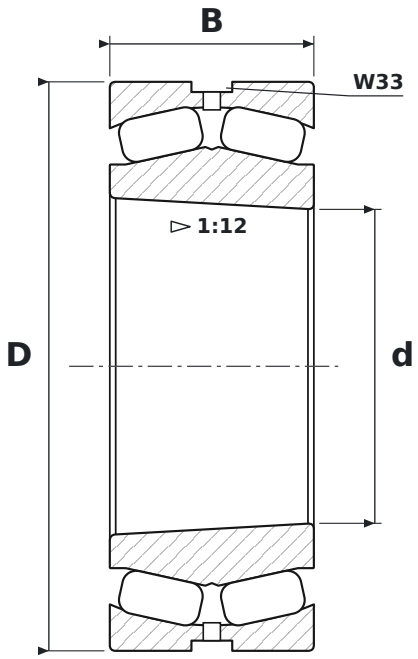

DIMENSIONS

d	bore diameter	**160 mm**
D	outside diameter	**290 mm**
B	width	**104 mm**

WHAT 23232 RKW33C3 MEANS

R	baryłki asymetryczne, koszyk masywny (obrabiany)
K	tapered bore, taper 1:12
W33	lubrication groove and holes in the outer ring
C3	radial clearance greater than normal

SPECIFICATIONS

Manufacturer	**KOYO**
Manufacturer designation	**23232 RKW33C3**
Rolling elements	**double-row spherical roller bearing**