Spherical roller bearing 24124 RHAW33 KOYO

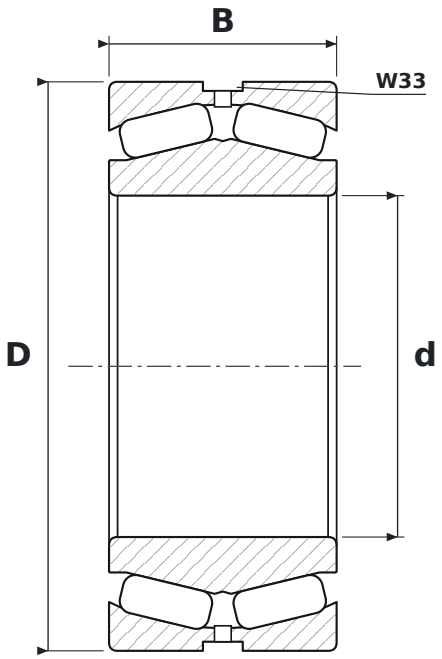

DIMENSIONS

d	bore diameter	**120 mm**
D	outside diameter	**200 mm**
B	width	**80 mm**

WHAT 24124 RHAW33 MEANS

RHA	baryłki symetryczne, koszyk masywny jednoczęściowy
W33	lubrication groove and holes in the outer ring

SPECIFICATIONS

Manufacturer	**KOYO**
Manufacturer designation	**24124 RHAW33**
Rolling elements	**double-row spherical roller bearing**