# Spherical roller bearing 24130-CE-C3-W33 NKE

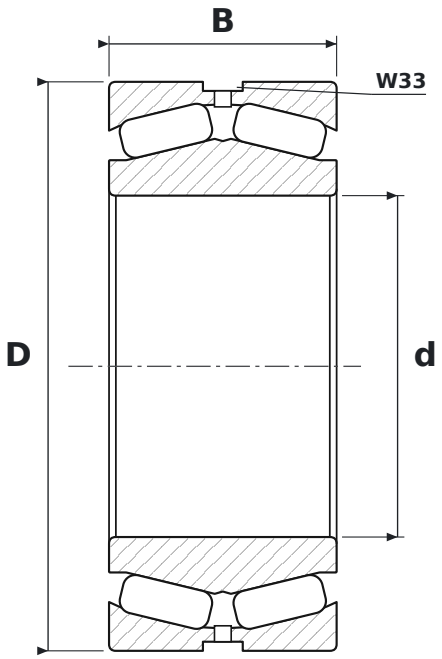


## DIMENSIONS

| | | |
|---|---|---|
| **d** | bore diameter | **150 mm** |
| **D** | outside diameter | **250 mm** |
| **B** | width | **100 mm** |

## WHAT 24130-CE-C3-W33 MEANS

| | |
|---|---|
| **CE** | wykonanie z symetrycznymi baryłkami, koszyk stalowy tłoczony |
| **C3** | radial clearance greater than normal |
| **W33** | lubrication groove and holes in the outer ring |

## SPECIFICATIONS

| | |
|---|---|
| Manufacturer | **NKE** |
| Manufacturer designation | **24130-CE-C3-W33** |
| Rolling elements | **double-row spherical roller bearing** |