Spherical roller bearing 24130-CE-K30-C3-W33 NKE

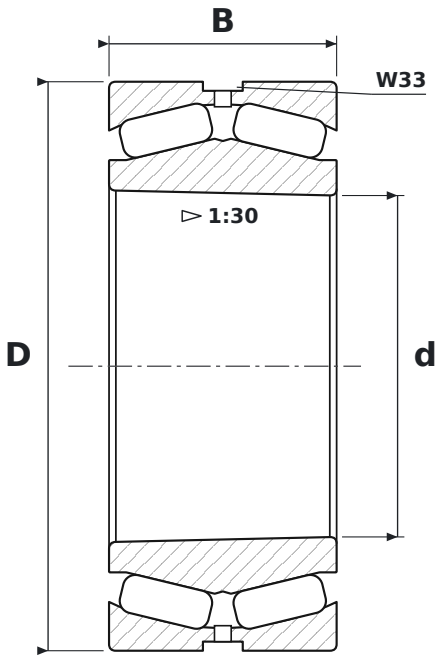

DIMENSIONS

d	bore diameter	**150 mm**
D	outside diameter	**250 mm**
B	width	**100 mm**

WHAT 24130-CE-K30-C3-W33 MEANS

CE	wykonanie z symetrycznymi baryłkami, koszyk stalowy tłoczony
K30	tapered bore, taper 1:30
C3	radial clearance greater than normal
W33	lubrication groove and holes in the outer ring

SPECIFICATIONS

Manufacturer	**NKE**
Manufacturer designation	**24130-CE-K30-C3-W33**
Rolling elements	**double-row spherical roller bearing**