CASTOMER

DATASHEET

Thrust roller bearing 29338-E NKE

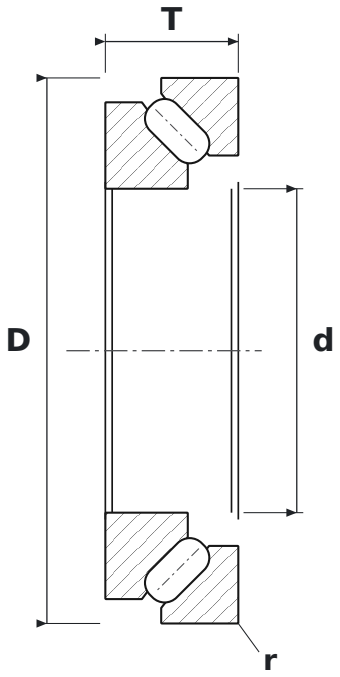

DIMENSIONS

d	bore diameter	**190 mm**
D	outside diameter	**320 mm**
T	bearing height	**78 mm**
d1	shaft washer outside diameter	**290.1 mm**
D1	housing washer bore diameter	**243.5 mm**
r	chamfer dimension (min.)	**4 mm**

SPECIFICATIONS

Manufacturer	**NKE**
Manufacturer designation	**29338-E**
r min – chamfer dimension	**4 mm**
Rolling elements	**single-row spherical roller bearing**
E	**reinforced design, higher load rating**
Basic dynamic load rating C	**1,680 kN**
Basic static load rating C0	**4,850 kN**
Limiting speed	**2,070 r/min**
Reference speed	**1,090 r/min**
Mass	**22.183 kg**