CASTOMER

DATASHEET

Thrust roller bearing 29452 E.M STEYR

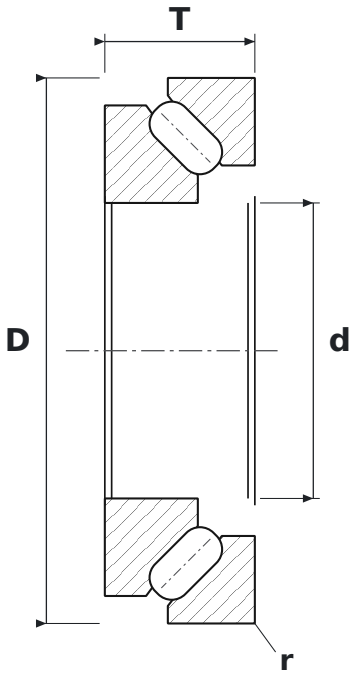

DIMENSIONS

d	bore diameter	**260 mm**
D	outside diameter	**480 mm**
T	bearing height	**132 mm**
d1	shaft washer outside diameter	**435 mm**
D1	housing washer bore diameter	**346 mm**
r	chamfer dimension (min.)	**6 mm**

WHAT 29452 E.M MEANS

E	reinforced design, higher load rating
M	machined brass cage

SPECIFICATIONS

Manufacturer	**STEYR**
Manufacturer designation	**29452 E.M**
r min – chamfer dimension	**6 mm**
Rolling elements	**single-row spherical roller bearing**
Basic dynamic load rating C	**4,400 kN**
Basic static load rating C0	**13,200 kN**
Limiting speed	**1,350 r/min**
Reference speed	**660 r/min**
Mass	**94.56 kg**