Spherical roller bearing BS2-2216-2RSVT143 SKF

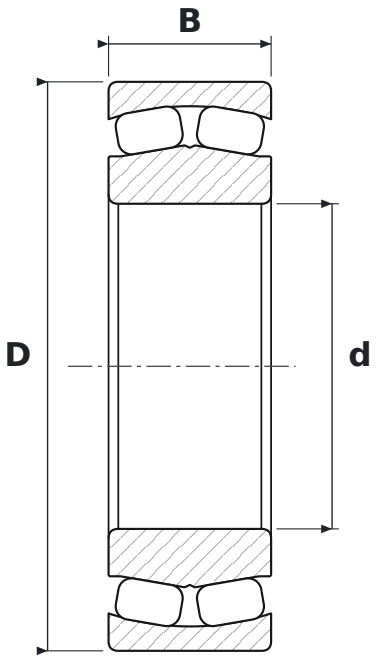

DIMENSIONS

d	bore diameter	**80 mm**
D	outside diameter	**140 mm**
B	width	**40 mm**

SPECIFICATIONS

Manufacturer	**SKF**
Manufacturer designation	**BS2-2216-2RSVT143**
Rolling elements	**spherical roller bearing**
2RS	**contact rubber seals, both sides**
Radial internal clearance	**CN – normal**
Mass	**2.42 kg**