# Spherical roller bearing BS2-2217-2RSK/VT143 SKF

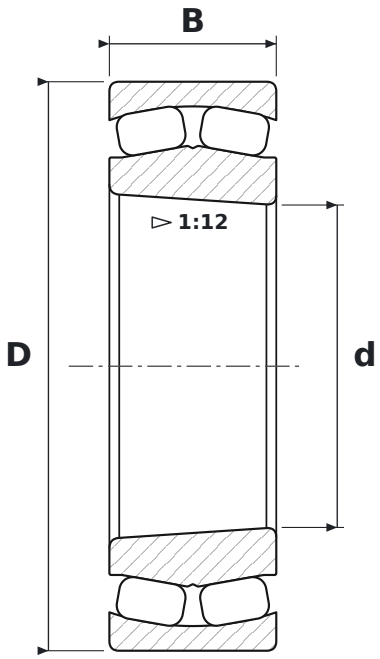


## DIMENSIONS

| | | |
|---|---|---|
| **d** | bore diameter | **85 mm** |
| **D** | outside diameter | **150 mm** |
| **B** | width | **44 mm** |

## SPECIFICATIONS

| | |
|---|---|
| Manufacturer | **SKF** |
| Manufacturer designation | **BS2-2217-2RSK/VT143** |
| Rolling elements | **spherical roller bearing** |
| 2RS | **contact rubber seals, both sides** |
| K | **tapered bore, taper 1:12** |
| Radial internal clearance | **CN – normal** |