Needle roller bearing BK3026 INA

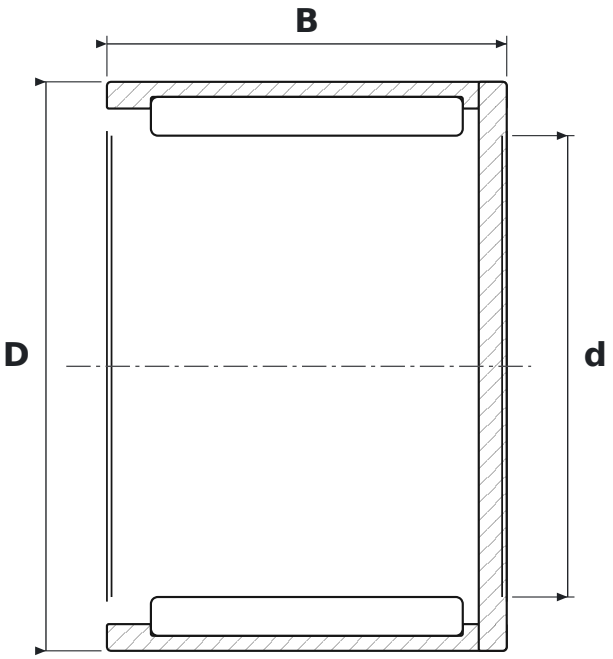

DIMENSIONS

d	bore diameter	**30 mm**
D	outside diameter	**37 mm**
B	width	**26 mm**

SPECIFICATIONS

Manufacturer	**INA**
Manufacturer designation	**BK3026**
Rolling elements	**needle roller bearing**
Seal	**open – no seals**
Radial internal clearance	**CN – normal**
Mass	**0.058 kg**