Needle roller bearing NK37/30 NKE

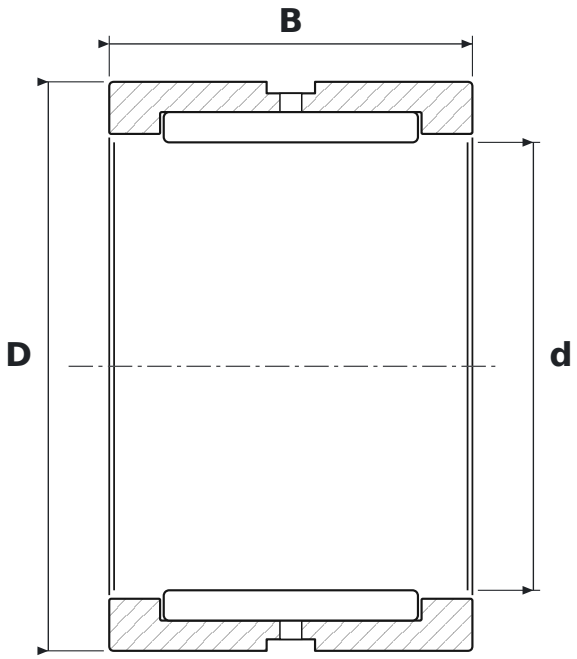

DIMENSIONS

d	bore diameter	**37 mm**
D	outside diameter	**47 mm**
B	width	**30 mm**

SPECIFICATIONS

Manufacturer	**NKE**
Manufacturer designation	**NK37/30**
Rolling elements	**needle roller bearing**
Radial internal clearance	**CN – normal**
Mass	**0.12 kg**