Needle roller bearing NK45/30 RCT+IR40-45-30 NTN

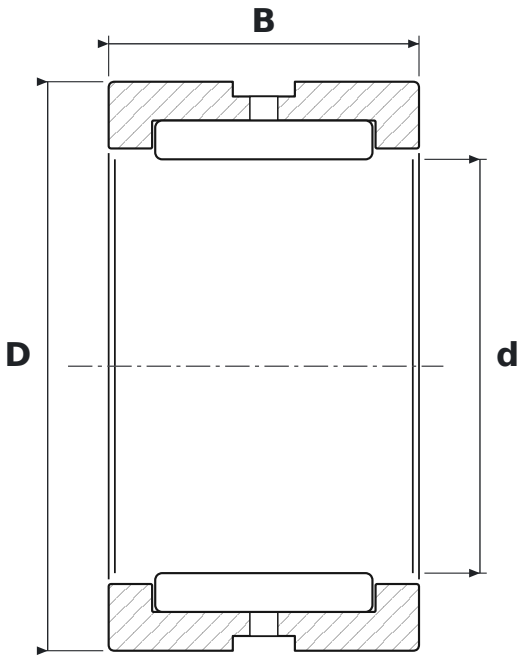

DIMENSIONS

d	bore diameter	**40 mm**
D	outside diameter	**55 mm**
B	width	**30 mm**

SPECIFICATIONS

Manufacturer	**NTN**
Manufacturer designation	**NK45/30 RCT+IR40-45-30**
Rolling elements	**needle roller bearing**
Seal	**open – no seals**
Radial internal clearance	**CN – normal**