Needle roller bearing NKI40/20 TN INA

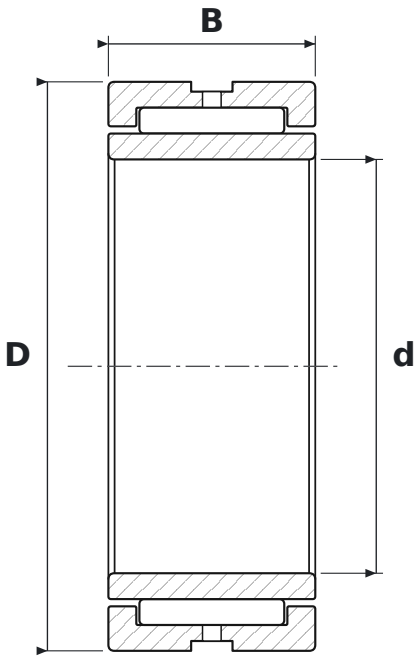

DIMENSIONS

d	bore diameter	**40 mm**
D	outside diameter	**55 mm**
B	width	**20 mm**

SPECIFICATIONS

Manufacturer	**INA**
Manufacturer designation	**NKI40/20 TN**
F – inner ring raceway diameter	**45 mm**
Rolling elements	**needle roller bearing**
TN	**polyamide cage**
Seal	**open – no seals**
Radial internal clearance	**CN – normal**
Mass	**0.142 kg**