Needle roller bearing NKI40/30 TVP NKE

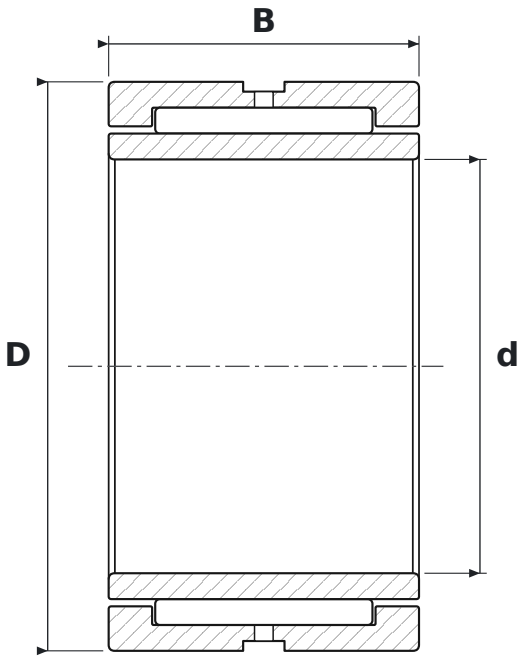

DIMENSIONS

d	bore diameter	**40 mm**
D	outside diameter	**55 mm**
B	width	**30 mm**

SPECIFICATIONS

Manufacturer	**NKE**
Manufacturer designation	**NKI40/30 TVP**
F – inner ring raceway diameter	**45 mm**
Rolling elements	**needle roller bearing**
TVP	**koszyk poliamidowy okienkowy**
Seal	**open – no seals**
Radial internal clearance	**CN – normal**