Deep groove ball bearing 108 TN9 SKF

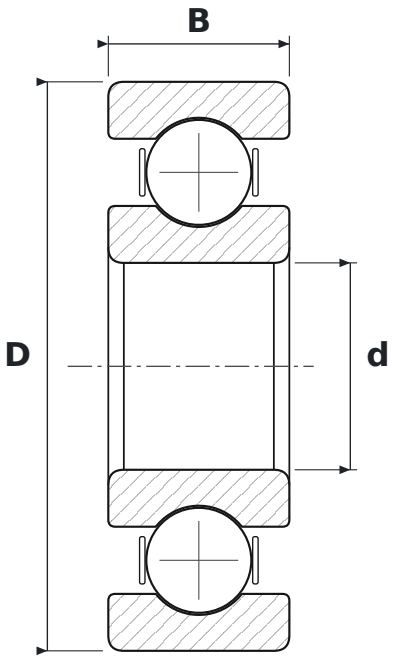

DIMENSIONS

d	bore diameter	**8 mm**
D	outside diameter	**22 mm**
B	width	**7 mm**

SPECIFICATIONS

Manufacturer	**SKF**
Manufacturer designation	**108 TN9**
Rolling elements	**single-row ball bearing**
TN9	**glass-fibre reinforced PA66 cage (SKF)**
Seal	**open – no seals**
Radial internal clearance	**CN – normal**