Deep groove ball bearing 108-TV NKE

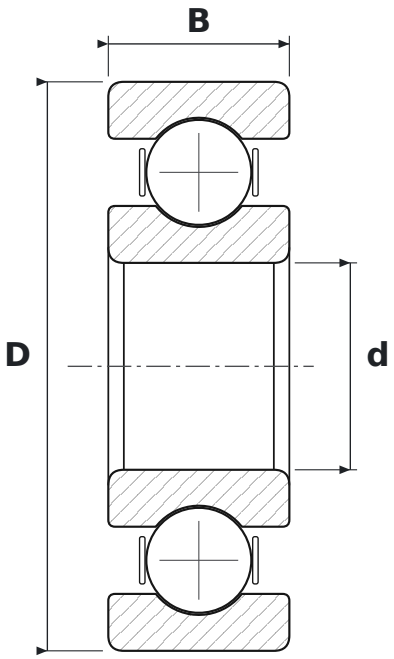

DIMENSIONS

d	bore diameter	**8 mm**
D	outside diameter	**22 mm**
B	width	**7 mm**

SPECIFICATIONS

Manufacturer	**NKE**
Manufacturer designation	**108-TV**
Rolling elements	**single-row ball bearing**
TV	**glass-fibre reinforced polyamide cage (FAG)**
Seal	**open – no seals**
Radial internal clearance	**CN – normal**