Deep groove ball bearing 108-TV-C3 FAG

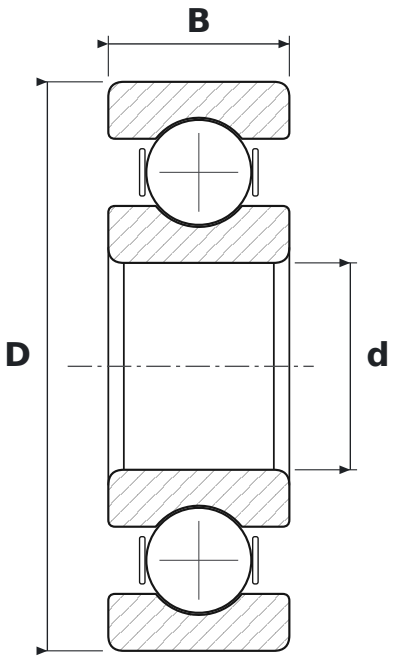

DIMENSIONS

d	bore diameter	**8 mm**
D	outside diameter	**22 mm**
B	width	**7 mm**

WHAT 108-TV-C3 MEANS

TV	glass-fibre reinforced polyamide cage (FAG)
C3	radial clearance greater than normal

SPECIFICATIONS

Manufacturer	**FAG**
Manufacturer designation	**108-TV-C3**
Rolling elements	**single-row ball bearing**