Self-aligning ball bearing 11204 TV NKE

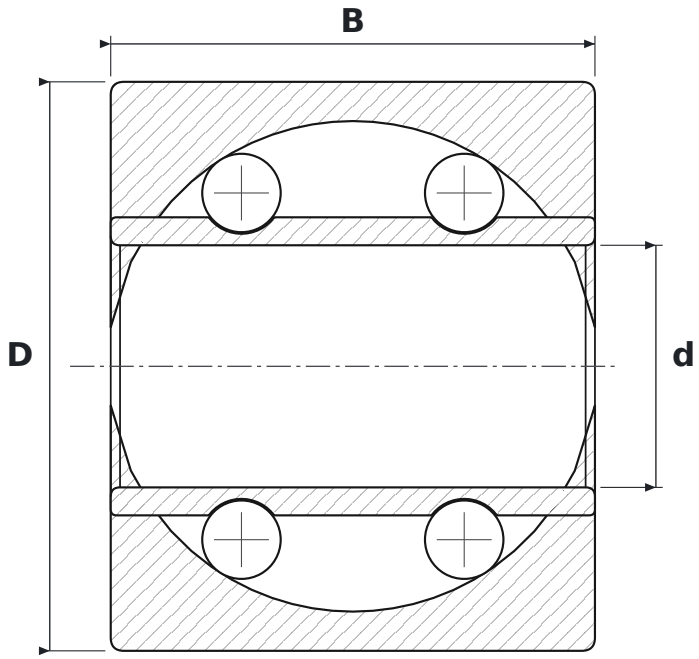

DIMENSIONS

d	bore diameter	**20 mm**
D	outside diameter	**47 mm**
B	width	**40 mm**

SPECIFICATIONS

Manufacturer	**NKE**
Manufacturer designation	**11204 TV**
Rolling elements	**double-row ball bearing**
TV	**glass-fibre reinforced polyamide cage (FAG)**
Seal	**open – no seals**
Radial internal clearance	**CN – normal**