Self-aligning ball bearing 11206 TV NKE

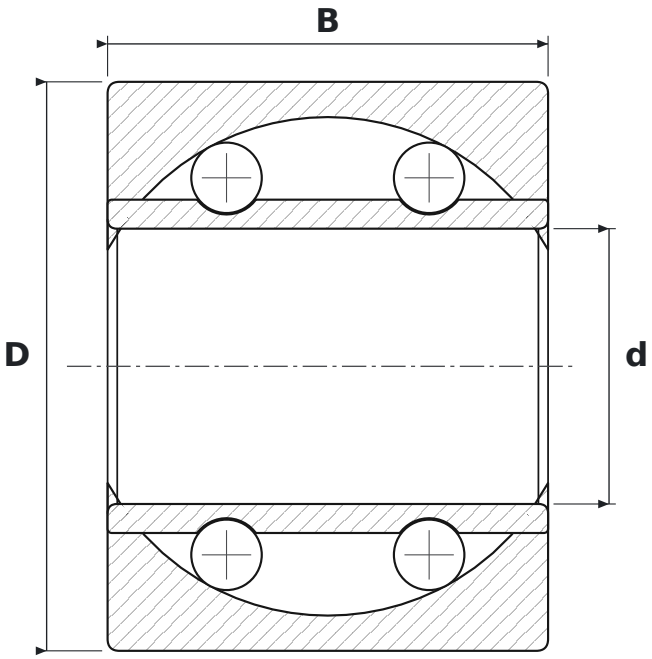

DIMENSIONS

d	bore diameter	**30 mm**
D	outside diameter	**62 mm**
B	width	**48 mm**

SPECIFICATIONS

Manufacturer	**NKE**
Manufacturer designation	**11206 TV**
Rolling elements	**double-row ball bearing**
TV	**glass-fibre reinforced polyamide cage (FAG)**
Seal	**open – no seals**
Radial internal clearance	**CN – normal**