Self-aligning ball bearing 11207 TN ZEN

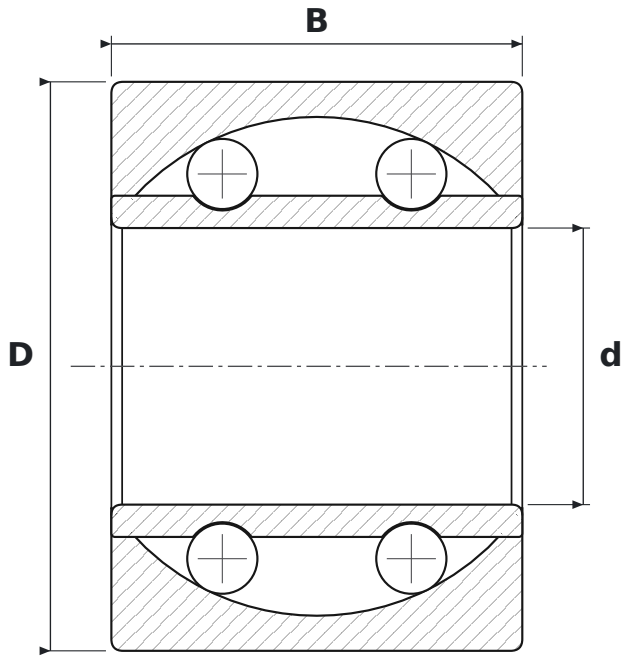

DIMENSIONS

d	bore diameter	**35 mm**
D	outside diameter	**72 mm**
B	width	**52 mm**

SPECIFICATIONS

Manufacturer	**ZEN**
Manufacturer designation	**11207 TN**
Rolling elements	**double-row ball bearing**
TN	**polyamide cage**
Seal	**open – no seals**
Radial internal clearance	**CN – normal**