Self-aligning ball bearing 11207 TV NKE

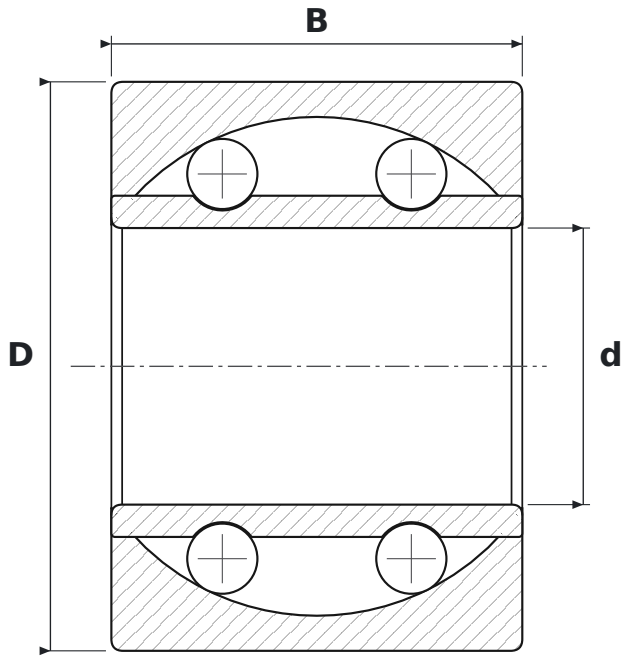

DIMENSIONS

d	bore diameter	**35 mm**
D	outside diameter	**72 mm**
B	width	**52 mm**

SPECIFICATIONS

Manufacturer	**NKE**
Manufacturer designation	**11207 TV**
Rolling elements	**double-row ball bearing**
TV	**glass-fibre reinforced polyamide cage (FAG)**
Seal	**open – no seals**
Radial internal clearance	**CN – normal**