Self-aligning ball bearing 11210 TN ZEN

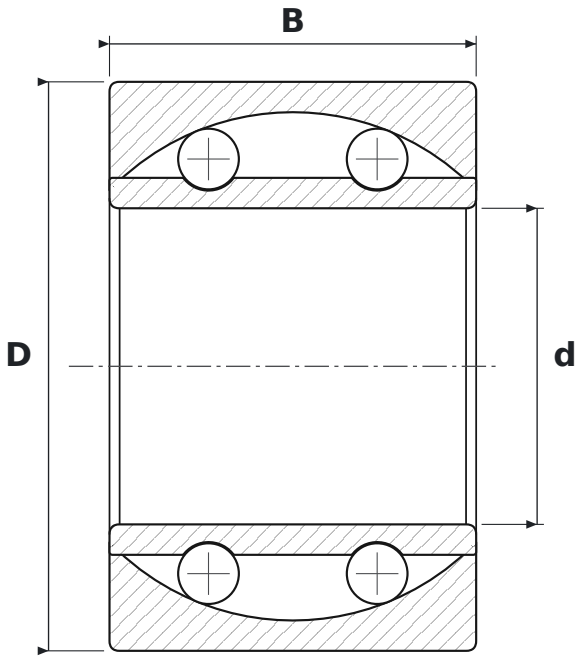

DIMENSIONS

d	bore diameter	**50 mm**
D	outside diameter	**90 mm**
B	width	**58 mm**

SPECIFICATIONS

Manufacturer	**ZEN**
Manufacturer designation	**11210 TN**
Rolling elements	**double-row ball bearing**
TN	**polyamide cage**
Seal	**open – no seals**
Radial internal clearance	**CN – normal**