Self-aligning ball bearing 11211 TV NKE

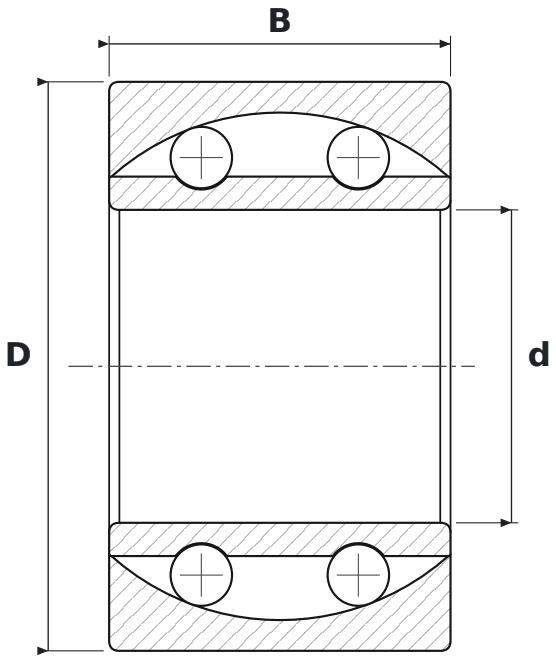

DIMENSIONS

d	bore diameter	**55 mm**
D	outside diameter	**100 mm**
B	width	**60 mm**

SPECIFICATIONS

Manufacturer	**NKE**
Manufacturer designation	**11211 TV**
Rolling elements	**double-row ball bearing**
TV	**glass-fibre reinforced polyamide cage (FAG)**
Seal	**open – no seals**
Radial internal clearance	**CN – normal**