Deep groove ball bearing 11505 ETN9 SKF

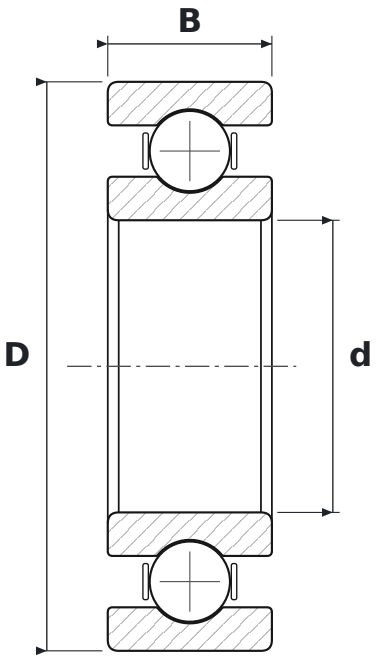

DIMENSIONS

d	bore diameter	**26.7 mm**
D	outside diameter	**52 mm**
B	width	**15 mm**

WHAT 11505 ETN9 MEANS

E	reinforced design, higher load rating
TN9	glass-fibre reinforced PA66 cage (SKF)

SPECIFICATIONS

Manufacturer	**SKF**
Manufacturer designation	**11505 ETN9**
Rolling elements	**single-row ball bearing**