Self-aligning ball bearing 1201 ETN9 SKF

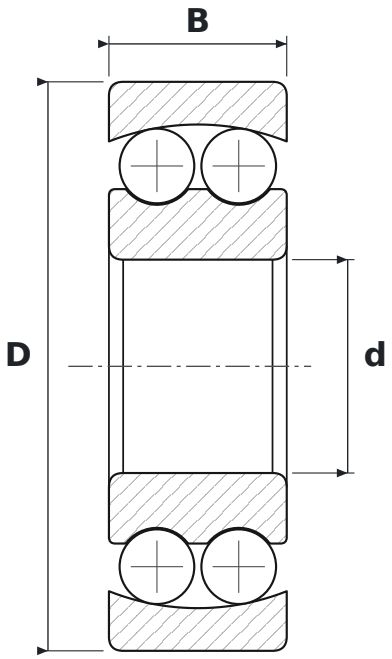

DIMENSIONS

d	bore diameter	**12 mm**
D	outside diameter	**32 mm**
B	width	**10 mm**

WHAT 1201 ETN9 MEANS

E	reinforced design, higher load rating
TN9	glass-fibre reinforced PA66 cage (SKF)

SPECIFICATIONS

Manufacturer	**SKF**
Manufacturer designation	**1201 ETN9**
Rolling elements	**double-row ball bearing**