Self-aligning ball bearing 1201 TNG NSK

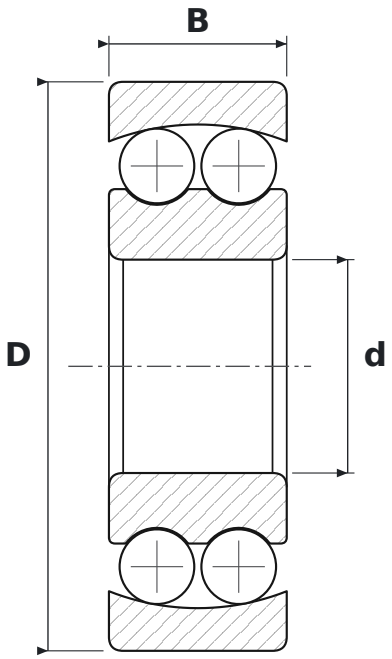

DIMENSIONS

d	bore diameter	**12 mm**
D	outside diameter	**32 mm**
B	width	**10 mm**

SPECIFICATIONS

Manufacturer	**NSK**
Manufacturer designation	**1201 TNG**
Rolling elements	**double-row ball bearing**
TNG	**koszyk zatrzaskowy z poliamidu PA66 wzmocnionego włóknem szklanym**
Seal	**open – no seals**
Radial internal clearance	**CN – normal**