Self-aligning ball bearing 1204 ZEN

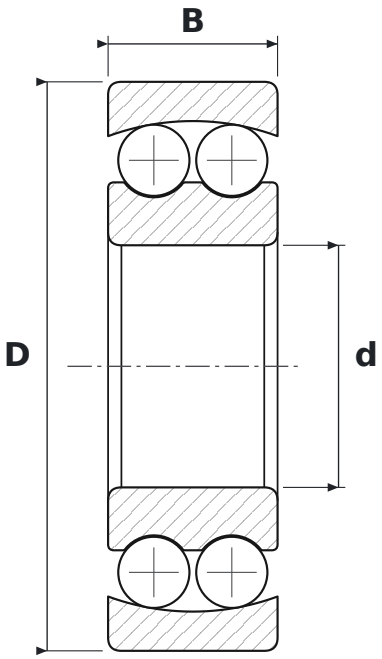

DIMENSIONS

d	bore diameter	**20 mm**
D	outside diameter	**47 mm**
B	width	**14 mm**

SPECIFICATIONS

Manufacturer	**ZEN**
Manufacturer designation	**1204**
Rolling elements	**double-row ball bearing**
Seal	**open – no seals**
Radial internal clearance	**CN – normal**