Self-aligning ball bearing 1206 EKTN9 SKF

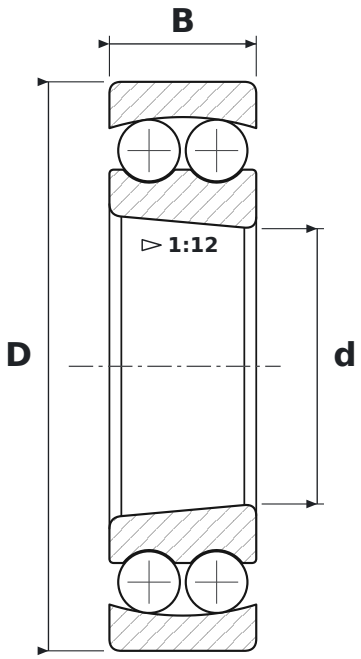

DIMENSIONS

d	bore diameter	**30 mm**
D	outside diameter	**62 mm**
B	width	**16 mm**

WHAT 1206 EKTN9 MEANS

E	reinforced design, higher load rating
K	tapered bore, taper 1:12
TN9	glass-fibre reinforced PA66 cage (SKF)

SPECIFICATIONS

Manufacturer	**SKF**
Manufacturer designation	**1206 EKTN9**
Rolling elements	**double-row ball bearing**