Self-aligning ball bearing 1206 KTNG NSK

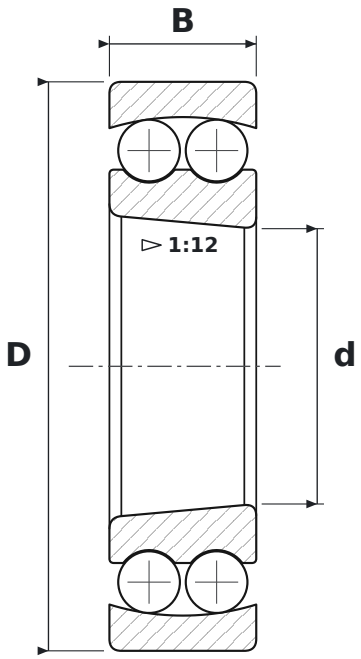

DIMENSIONS

d	bore diameter	**30 mm**
D	outside diameter	**62 mm**
B	width	**16 mm**

WHAT 1206 KTNG MEANS

K	tapered bore, taper 1:12
TNG	koszyk zatrzaskowy z poliamidu PA66 wzmocnionego włóknem szklanym

SPECIFICATIONS

Manufacturer	**NSK**
Manufacturer designation	**1206 KTNG**
Rolling elements	**double-row ball bearing**